Tagra | SSC16 | Surface | Corner | 16x16mm | LED Channel | White | 3M

CHAN-1616-WHT-3M / ITM000193



Datasheet

23-10-2026

www.tagra-lighting.co.uk

support@tagra-lighting.co.uk

Tagra | SSC16 | Surface | Corner | 16x16mm | LED Channel | White | 3M

IP Rating	Lit Surface	Max Width	Mounting	Warranty
IP20	16mm	10mm	Surface	5 Years

SKU: CHAN-1616-WHT-3M

ITM: ITM000193

Key Features:

- **Dimensions (mm):** 16mm x 16mm x 3000mm
- **Body Colour:** White
- **Dimensions (W x H x L):** 16 x 16 x 3000mm

Mechanical Data

Body Colour:	White	**Illuminated Surface Width:**	16mm
Max. LED Strip Light Width:	10mm	**Min. Pitch for Diffusion:**	240
No. of Rows for Non-Spotting:	1	**Product Weight:**	319g
Dimensions (LxWxH):	3000 x 16 x 16mm		

Photometric Data

Beam Angle:	114°	**Diffuser Colour:**	No Diffuser
Diffuser Finish:	No Diffuser		

Environmental Data

Body Material:	Aluminium	**Ingress Protection (IP):**	IP20
Mounting Type:	Surface Mounted		

Dimension Drawing

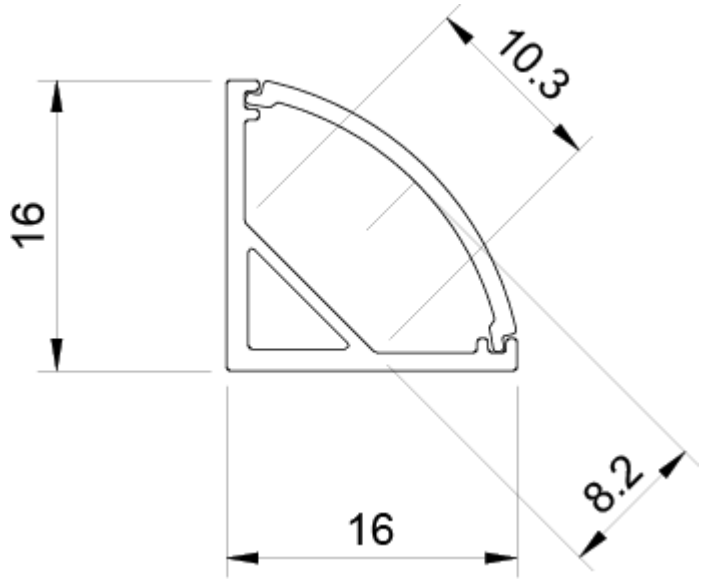

Packaging Data

Items / Sets Per Pack:	1	**Packaging Height:**	16mm
Packaging Length:	3000mm	**Packaging Width:**	16mm
Packaging Weight:	337g		

Disclaimer

Tagra Lighting have taken reasonable care to ensure that the information in this datasheet is accurate at time of publication however it should be noted that all specifications are subject to tolerance. Descriptive specifications such as colour are subjective. Tagra Lighting reserve the right to update specifications without notice. The information in the datasheet may only be relied on by customers of Tagra Lighting in accordance with applicable terms and conditions.

Tagra Lighting is a trading name of T.R Ventures Limited, a company incorporated in England with registered number 07757720. Our registered office is Unit 2, Southfield Industrial Estate, Trafford Park, M17 1SJ.

www.tagra-lighting.co.uk

support@tagra-lighting.co.uk